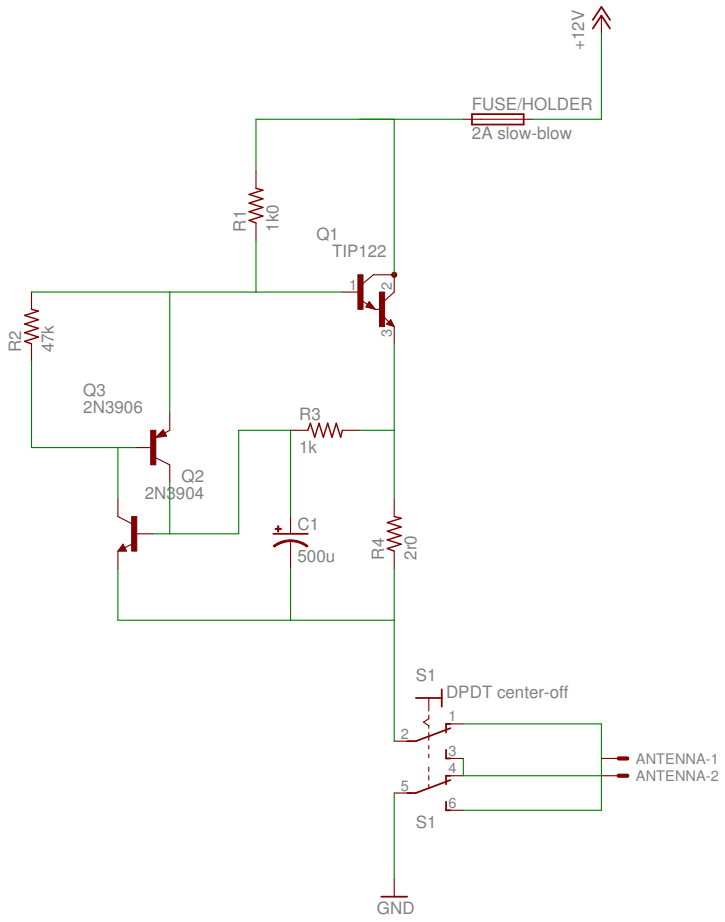
+12V
FUSE/HOLDER
2A slow-blow
R1
1k0
Q1
TIP122
1
2
3
R2
47k
Q3
2N3906
R3
1k
Q2
2N3904
C1
500u
R4
2r0
S1
DPDT center-off
1
2
3
4
5
6
ANTENNA-1
ANTENNA-2
S1
GND