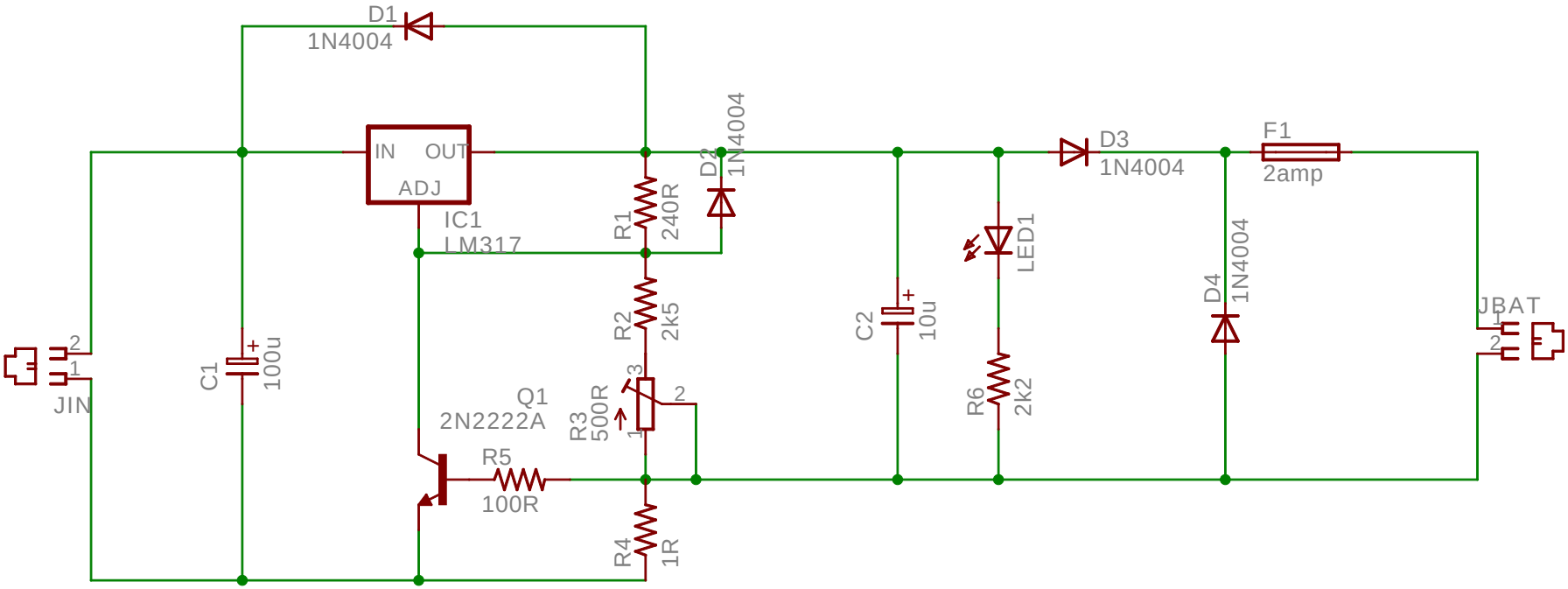

7/16/2003 11:02:37 /home/dplatt/eagle/Controller/float-charger.sch (Sheet: 1/1)