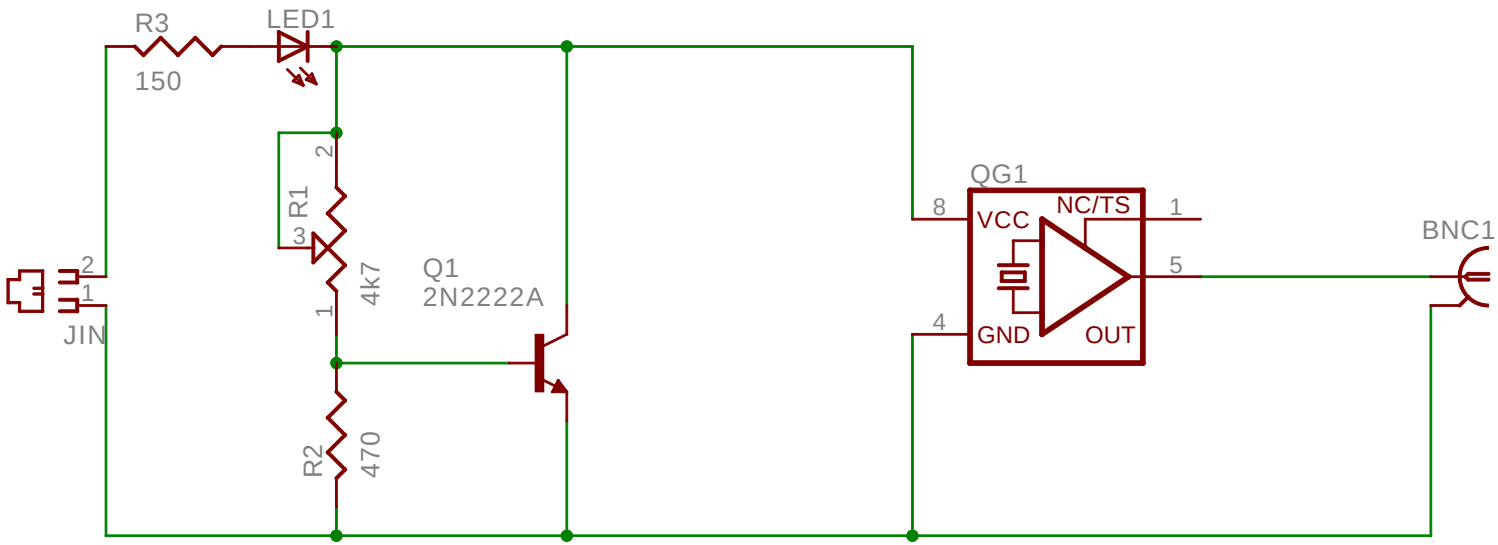
R3
150
LED1
R1
4k7
2
3
1
Q1
2N2222A
R2
470
JIN
2
1
QG1
8
VCC
NC/TS
1
5
4
GND
OUT
BNC1